Rating	DC30V 100mA	Electrical Life	1,0000 cycles
Contact Resistance	100mΩ Max	Mechanical Life	1,0000 cycles
Insulation Resistance	>100MΩ DC500V	Ambient Temper. Used	-25℃ to +85℃
Withstand Voltage	AC250V 1min.	Ambient Humidity Used	≤85% at +40℃
Soldering Temper.	235±5℃ 5s	Operating Force	30±20gf max

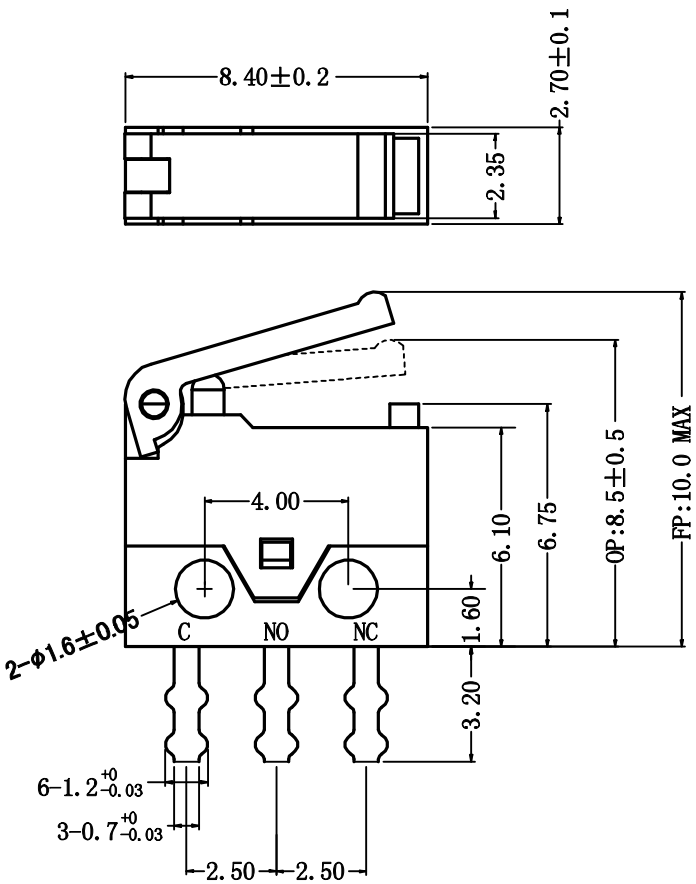

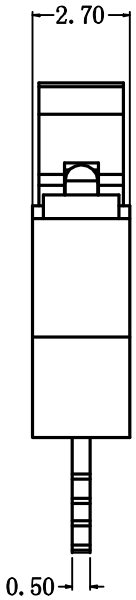

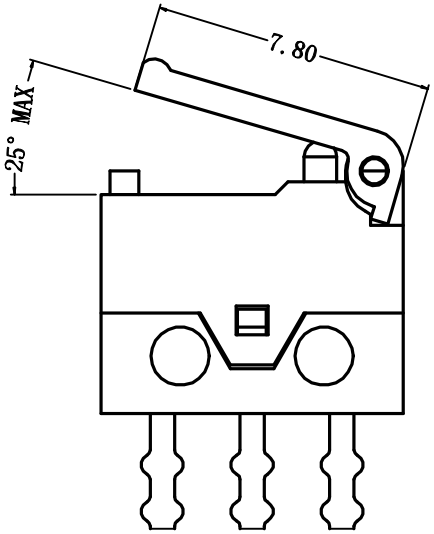

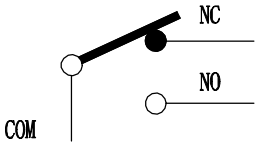

序号 NO.	零件名称 Part Name	数量 Quantity	材质 Material	备注 Notes
7	压柄(LEVER)	1	尼龙 (Nylon)	
6	端子(TERMINAL)	3	C2680(Brass)	镀银(Silver plating)
5	触点(CONTACT)	1	银合金 (Silver Alloy)	
4	按钮(BUTTON)	1	PBT	
3	弹片(SPRING)	1	C17200(Beryllium copper)	
2	盖片(COVER)	1	尼龙 (Nylon)	
1	底座 (BASE)	1	尼龙 (Nylon)	黑色(Black)

Guangdong Tengjun Electronic Technology Co., Ltd

TENGJUN®

PART NAME	超小型微动开关（2.7井深）	DRAWING NO:	JE027-01P-30-3			REV A0	SIZE: A4
PART NO.	JE027-01CR-30-3	DRAWING: Li	DATE: 2019.11.12	SCALE	1:1		
		CHECK: Chen	DATE: 2019.11.12	SHEET	1 / 1		
		APPROVAL: Yuan	DATE: 2019.11.12				

TOLERANCE UNLESS OTHERWISE SPECIFIED:
X ±0.2
X.X ±0.15
X.XX ±0.10
X.XXX ±0.050